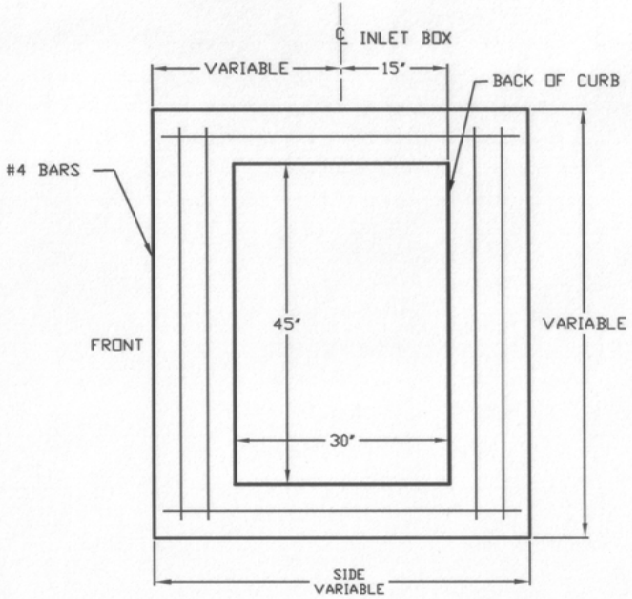

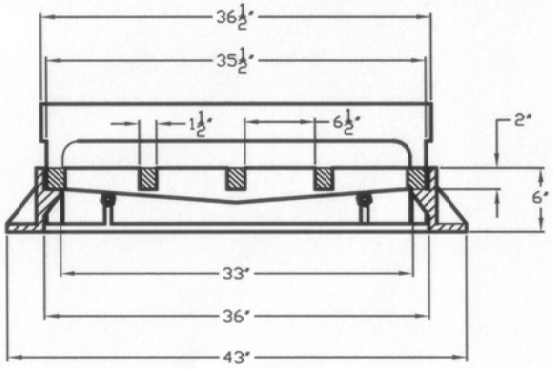

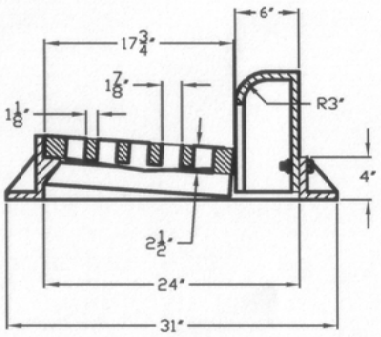

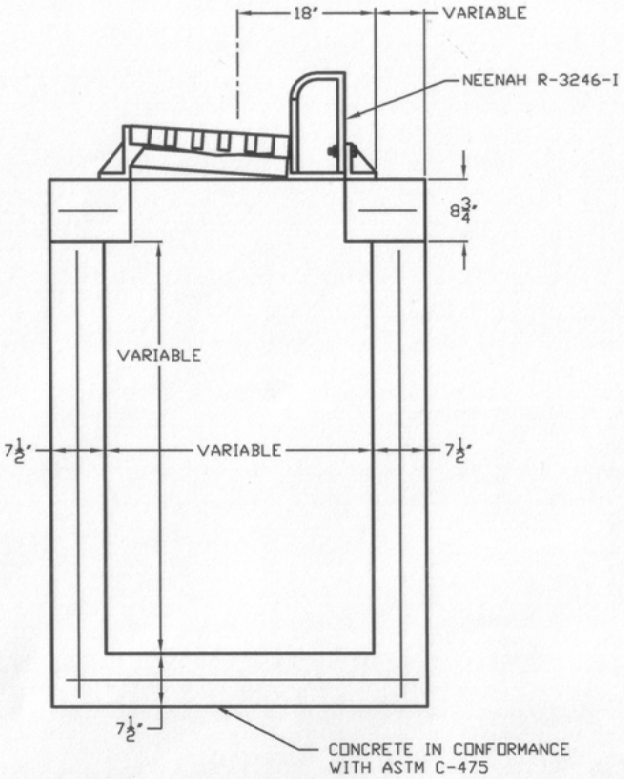

CURB INLET BOX & LID
PRECAST

CURB INLET FRAME, GRATE, CURB BOX

CITY OF O'FALLON
255 South Lincoln
O'Fallon, Illinois

DRAWN BY:	JDG	SCALE: NONE	DRAWING No.
CHK'D BY:	---	DATE: 01/05/05	
APP'D BY:	---	SHEET: 1 OF 1	
FILENAME: -			