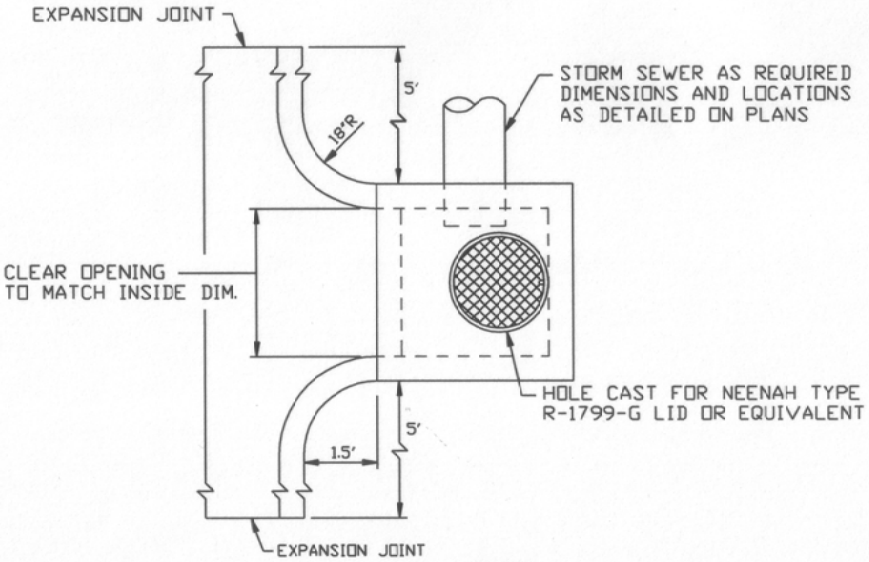

PLAN

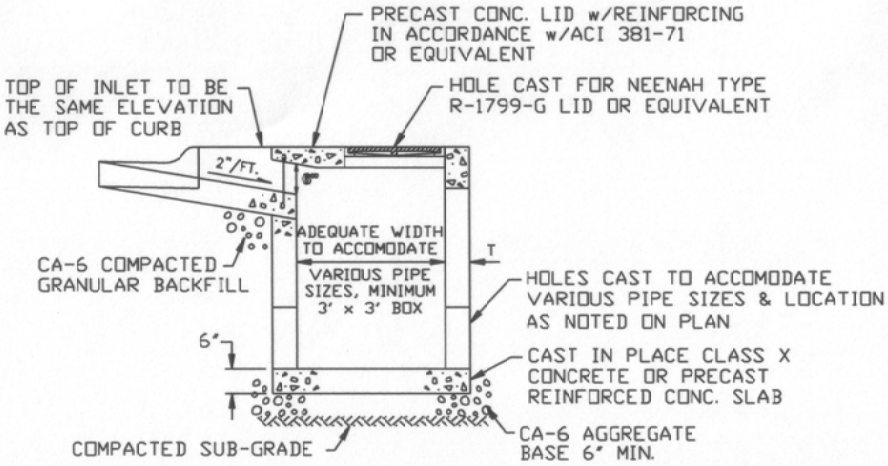

ELEVATION

ALL INLET BOXES WITH STORM SEWER PIPES EXCEEDING 24" MUST HAVE INNER DIMENSIONS OF 12' PLUS THE DIAMETER OF THE PIPE.

ALL EROSION CONTROL PROTECTION AT INLET THROATS TO BE PROVIDED BY THE OWNER

TYPICAL OPEN THROAT INLET

CITY OF O'FALLON

255 South Lincoln
O'Fallon, Illinois

DRAWN BY:	JDG	SCALE: NONE	DRAWING No.
CHK'D BY:	---	DATE: 01/05/05	
APP'D BY:	---	SHEET: 1 OF 1	
FILENAME: -			