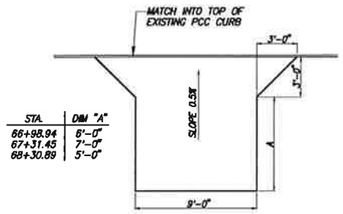

STA.	DIM "A"
66+98.94	6'-0"
67+31.45	7'-0"
68+30.89	5'-0"

DRIVEWAY PAVEMENT DETAIL

N.T.S.

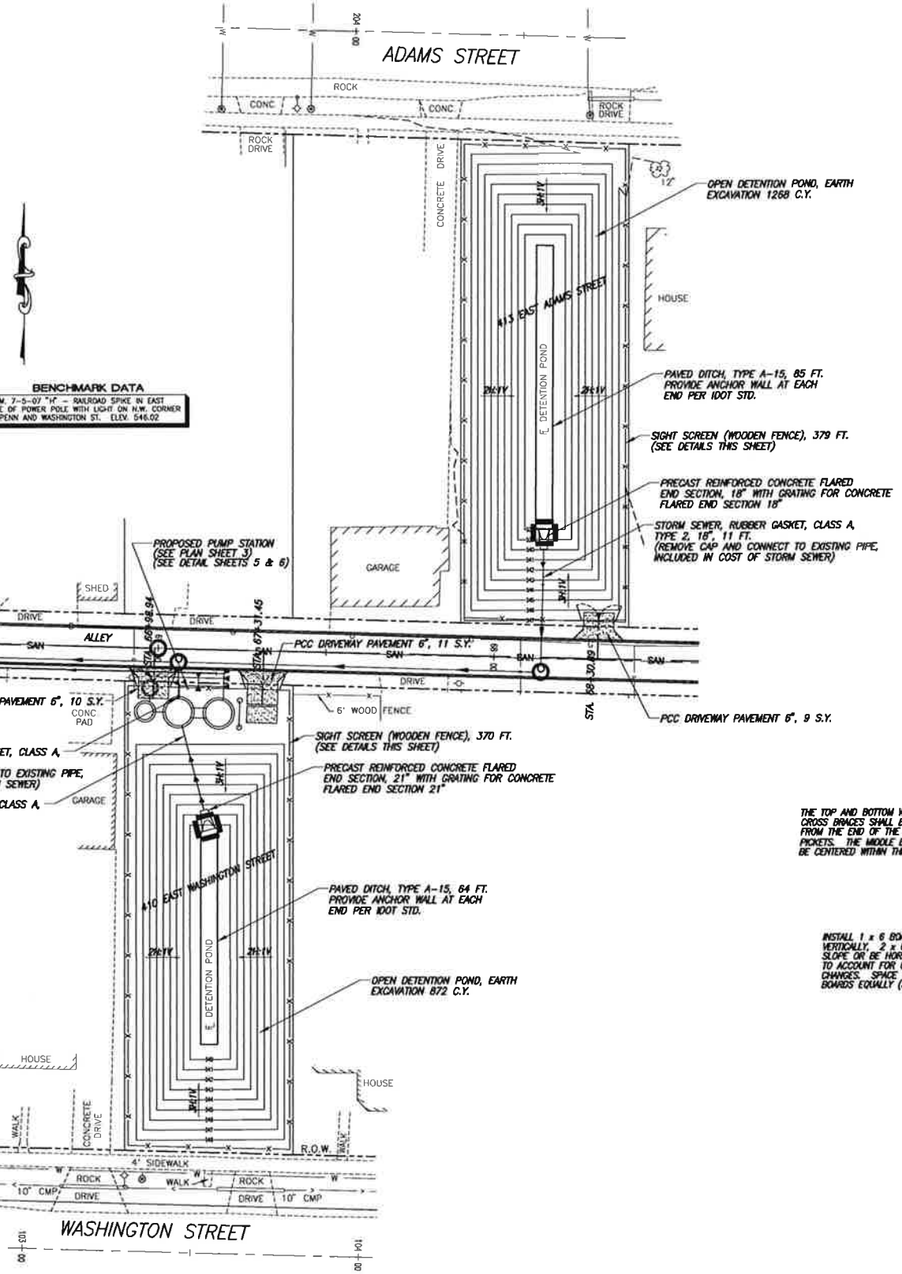

BENCHMARK DATA

T.B.M. 7-5-07 "H" – RAILROAD SPIKE IN EAST FACE OF POWER POLE WITH LIGHT ON N.W. CORNER OF PENN AND WASHINGTON ST. ELEV. 546.02

DETENTION SITE PLAN

SCALE: 1"=20'

LEGEND

	STRUCTURES
500	CONTOUR LINE
	CENTER LINE
	FLOW LINE DITCH
	STORM SEWER
SAN	SANITARY SEWER
G	GAS MAIN
W	WATER MAIN
INV 520.00	INVERT ELEVATION
	GRATED STORM SEWER INLET
	MANHOLE
	WATER METER
	WATER VALVE
	GAS VALVE
	GAS METER
	FIRE HYDRANT
	UTILITY POLE
	GUY WIRE
	LIGHT POLE
	TELEPHONE PEDESTAL
	SIGN
	STREET SIGN
	BUSH
12"	TREE
	FLAG POLE
X	FENCE (NOTE TYPE OF FENCE)
	RIGHT-OF-WAY LINE
	EDGE OF ROAD/SHOULDER
	PROPOSED PIPE OR INLET PROTECTION

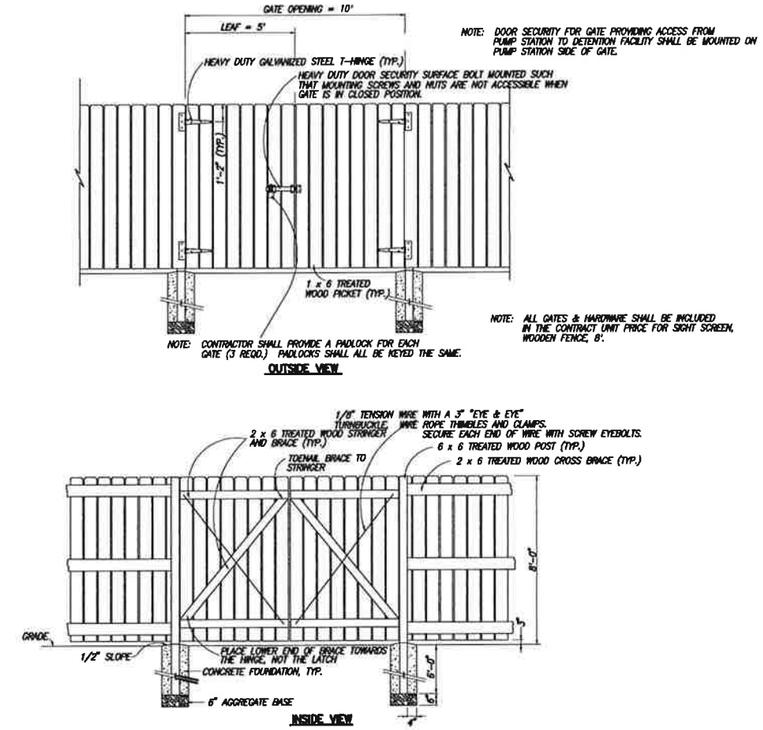

NOTE: DOOR SECURITY FOR GATE PROVIDING ACCESS FROM PUMP STATION TO DETENTION FACILITY SHALL BE MOUNTED ON PUMP STATION SIDE OF GATE.

NOTE: ALL GATES & HARDWARE SHALL BE INCLUDED IN THE CONTRACT UNIT PRICE FOR SIGHT SCREEN, WOODEN FENCE, 8'.

WOOD FENCE GATE DETAILS

NOTE

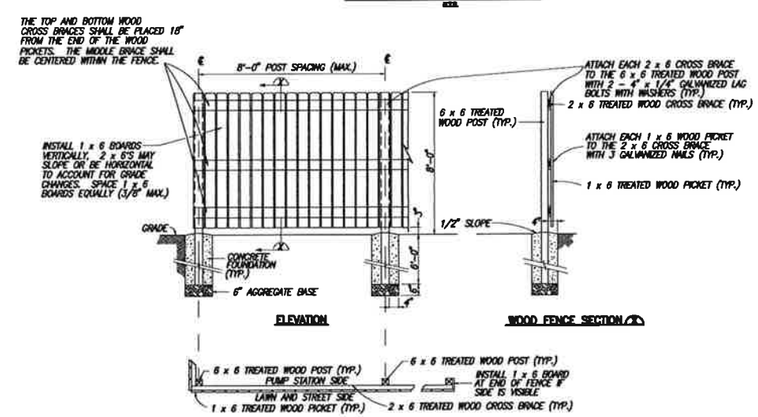

WOODEN FENCE DETAILS

N.T.S.

SYMBOL	DRAWN	APV'D	DESCRIPTION	DATE

REVISIONS

DR BY: M.A.L. APV'D BY: T.M.L.

CK'D BY: A.A.S.

DETENTION SITE PLANS & DETAILS

PHASED STREET AND STORMWATER PHASE 2 – DETENTION & PUMP O'FALLON, ILLINOIS

RHUTASEL and ASSOCIATES, INC.
CONSULTING ENGINEERS • LAND SURVEYORS
FREEBURG, IL. 62243 TEL: (618) 539-3178
CENTRALIA, IL. 62801 TEL: (618) 532-1992
IL LICENSE NO. 184-000887

SCALE: N.T.S. SHEET NO. 3

DATE: MARCH, 2013 OF 8

BENCHMARK DATA

T.B.M. 7-5-07 "H" – RAILROAD SPIKE IN EAST FACE OF POWER POLE WITH LIGHT ON N.W. CORNER OF PENN AND WASHINGTON ST. ELEV. 546.02

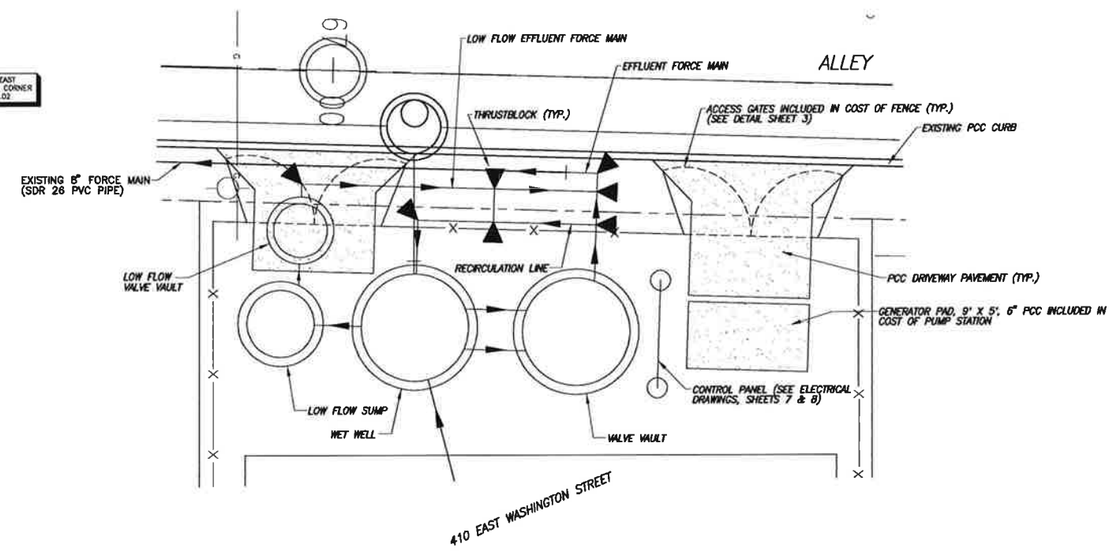

PUMP STATION SITE PLAN

SCALE: 1"=5'

LEGEND

	STRUCTURES
500	CONTOUR LINE
	CENTER LINE
	FLOW LINE DITCH
	STORM SEWER
SAN	SANITARY SEWER
G	GAS MAIN
W	WATER MAIN
INV 520.00	INVERT ELEVATION
	GRATED STORM SEWER INLET
	MANHOLE
	WATER METER
	WATER VALVE
	GAS VALVE
	GAS METER
	FIRE HYDRANT
	UTILITY POLE
	GUY WIRE
	LIGHT POLE
	TELEPHONE PEDESTAL
	SIGN
	STREET SIGN
	BUSH
12"	TREE
	FLAG POLE
	FENCE (NOTE TYPE OF FENCE)
	RIGHT-OF-WAY LINE
	EDGE OF ROAD/SHOULDER

SYMBOL	DRAWN	APV'D	DESCRIPTION	DATE
REVISIONS				

DR. BY: M.A.L. APV'D BY: T.M.L.

CK'D BY: A.A.S.

PUMP STATION SITE PLAN

PHASED STREET AND STORMWATER PHASE 2 – DETENTION & PUMP O'FALLON, ILLINOIS

RHUTASEL and ASSOCIATES, INC.
CONSULTING ENGINEERS • LAND SURVEYORS
FREEBURG, IL. 62243 TEL: (618) 539-3178
CENTRALIA, IL. 62801 TEL: (618) 532-1992

SCALE: N.T.S. SHEET NO. 4

DATE: MARCH, 2013 OF 8

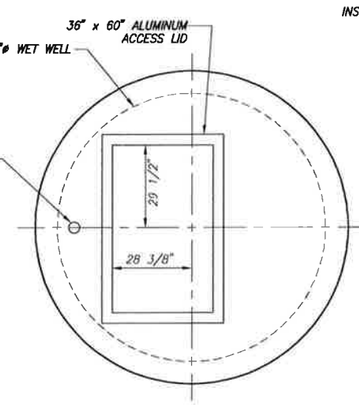

PROPOSED WET WELL LID

SCALE: 1/2" = 1'

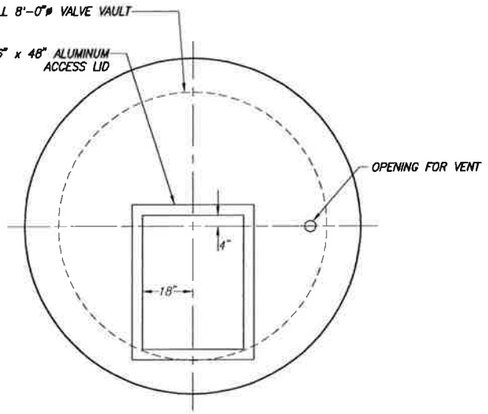

PROPOSED VALVE VAULT LID

SCALE: 1/2" = 1'

PIPING LEGEND

1. 8" FLG. D.I.P.
2. 8" FLG./P.E. D.I.P.
3. 8" PVC FORCE MAIN
4. 8"x 8"x 8" FLG. TEE
5. 8" DRESSER COUPLING
6. 8" FLG. 90° ELBOW
7. 8" FLG. CHECK VALVE
8. 8" FLG. GATE VALVE
9. 4" FLG. 90° ELBOW
10. 8"x 4" FLG. REDUCER
11. 4" FLG. GATE VALVE

⊗ PIPE SUPPORT

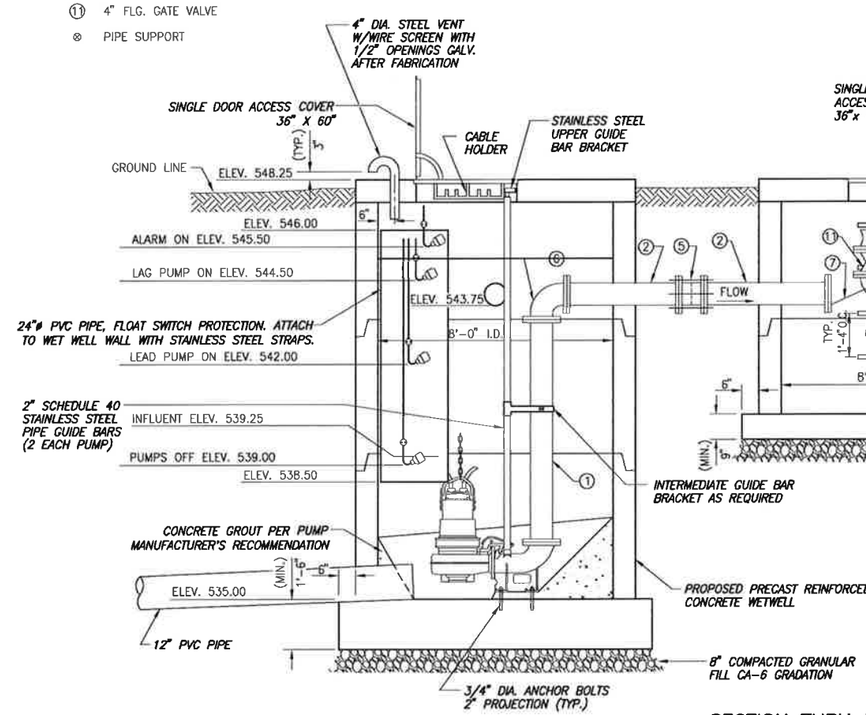

SECTION THRU PROPOSED WET WELL

SCALE: 1/2" = 1'

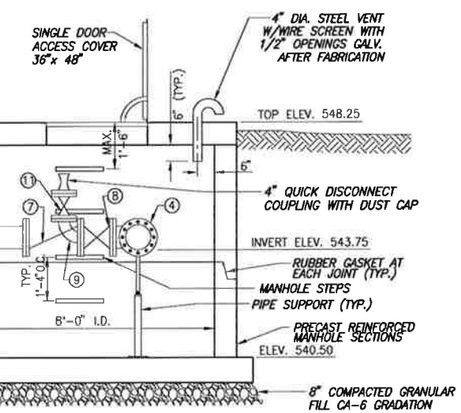

SECTION THRU PROPOSED VALVE VAULT

SCALE: 1/2" = 1'

NOTE:

ALL PRECAST REINFORCED CONCRETE SECTIONS SHALL CONFORM TO THE REQUIREMENTS OF ASTM C-478.

SYMBOL	DRAWN	APV'D	DESCRIPTION	DATE

REVISIONS

DR BY: M.A.L. APV'D BY: T.M.L.
CK'D BY: A.A.S.

PUMP STATION DETAILS

PHASED STREET AND STORMWATER PHASE 2 – DETENTION & PUMP O'FALLON, ILLINOIS

RHUTASEL and ASSOCIATES, INC.
CONSULTING ENGINEERS • LAND SURVEYORS
FREEBURG, IL. 62243 TEL: (618) 539-3178
CENTRALIA, IL. 62801 TEL: (618) 532-1992
IL LICENSE NO. 184-000867

SCALE: N.T.S. SHEET NO. 5
DATE: MARCH, 2013 OF 8

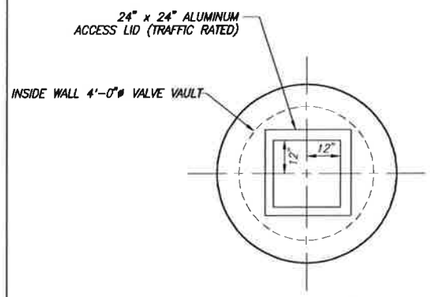

PROPOSED LOW FLOW VALVE VAULT LID

SCALE: 1/2" = 1'

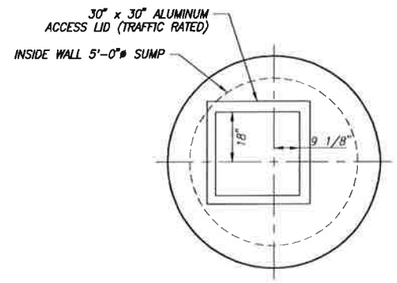

PROPOSED LOW FLOW SUMP LID

SCALE: 1/2" = 1'

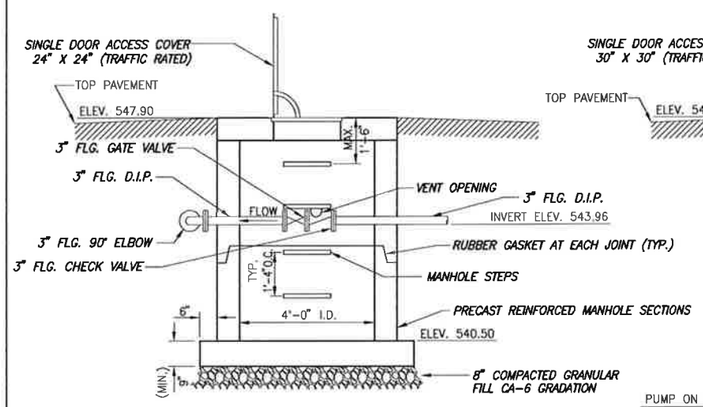

N-S SECTION THRU PROPOSED LOW FLOW VALVE VAULT

N.T.S.

(SHOWN OFFSET FROM ACTUAL LOCATION FOR CLARITY)

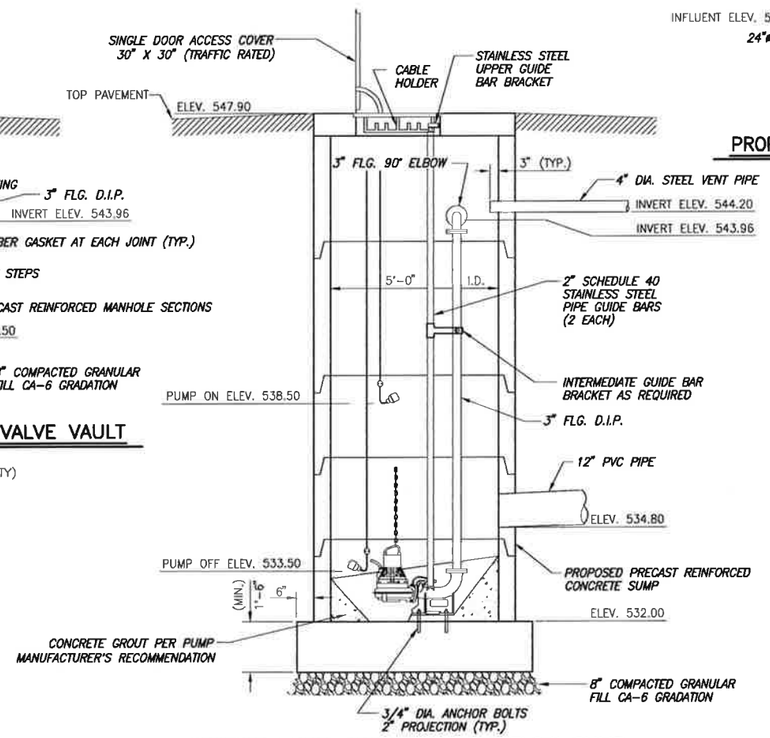

SECTION THRU PROPOSED LOW FLOW SUMP

N.T.S.

(SHOWN OFFSET FROM ACTUAL LOCATION FOR CLARITY)

PROPOSED LOW FLOW VALVE VAULT

SCALE: 1/2" = 1'

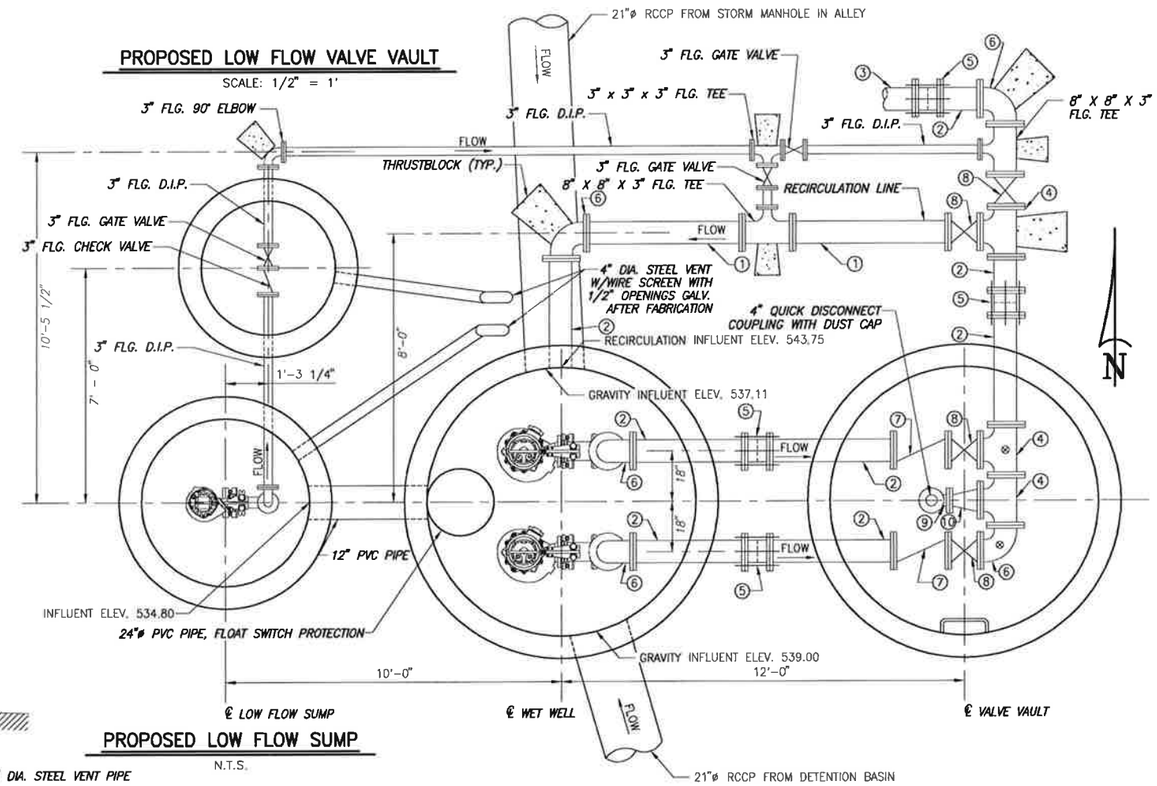

PROPOSED LOW FLOW SUMP

N.T.S.

PROPOSED WET WELL

N.T.S.

PROPOSED VALVE VAULT

N.T.S.

PIPING LEGEND

1. 8" FLG. D.I.P.
2. 8" FLG./P.E. D.I.P.
3. 8" PVC FORCE MAIN
4. 8"x 8"x 8" FLG. TEE
5. 8" DRESSER COUPLING
6. 8" FLG. 90° ELBOW
7. 8" FLG. CHECK VALVE
8. 8" FLG. GATE VALVE
9. 4" FLG. 90° ELBOW
10. 8"x 4" FLG. REDUCER
11. 4" FLG. GATE VALVE

⊗ PIPE SUPPORT

SYMBOL	DRAWN	APV'D	DESCRIPTION	DATE

REVISIONS

DR. BY: M.A.L. APV'D BY: T.M.L.
CK'D BY: A.A.S.

PUMP STATION DETAILS

PHASED STREET AND STORMWATER PHASE 2 – DETENTION & PUMP O'FALLON, ILLINOIS

RHUTASEL and ASSOCIATES, INC.
CONSULTING ENGINEERS • LAND SURVEYORS
FREEBURG, IL 62243 TEL: (618) 539-3178
CENTRALIA, IL 62801 TEL: (618) 532-1992
E. LICENSE NO. 184-000267

SCALE: N.T.S. SHEET NO. 6
DATE: MARCH, 2013 OF 8

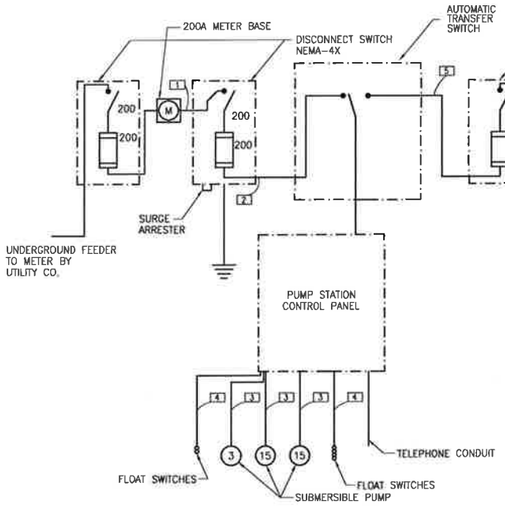

1 POWER ONE – LINE DIAGRAM
E100 NOT TO SCALE

WIRE & CONDUIT SCHEDULE

MARK	WIRE	GND	CONDUIT
1	3 #3/0	#6	2"
2	3 #3/0	#6	2"
3	3/C#10 SOW/SOWA*		2"**
4	FLOAT CABLES*		2"**
5	3 #3/0	#6	2"

* CABLE SUPPLIED WITH MOTOR OR FLOAT SWITCH OF SUFFICIENT LENGTH TO CONNECT TO CONTROL PANEL.

** INSTALL P.V.C. COATED RIGID CONDUIT FROM WET WELL TO ABOVE GRADE. INSTALL CABLES. SEAL OPENINGS IN WET WELL.

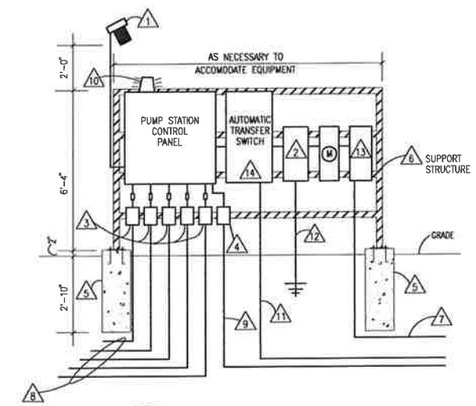

2 ELEVATOR – PUMP STATION CONTROL PANEL
E100 NOT TO SCALE

ELEVATION NOTES:

1. STANCHION MOUNTED LIGHT FIXTURE WITH LAMP – 100 WATT HPS WITH POLYCARBONATE GLOBE AND PHOTOCELL CONTROL. HAZLITE MODEL #PS-10C12-TGP-S5 / VPC12 INSTALLED ON A 1-1/2" CONDUIT STANCHION.
2. 200A-3P, 480V, NEMA-4X STAINLESS STEEL FUSIBLE DISCONNECT SWITCH WITH 200A FUSES FOR USE WITH 480V, 3PH-3W ELECTRIC SERVICE ENTRANCE.
3. SEE "TERMINAL BOX DETAIL" AND "TERMINAL BOX NOTES". (FIVE REQUIRED-ONE FOR EACH PUMP CABLE AND TWO FOR FLOAT SWITCH CABLES)
4. JUNCTION BOX FOR INSTALLATION OF TELEPHONE COMPANY INTERFACE DEVICE. BOX TO BE HOFFMAN BUL A-42 #A11B7PC3 WITH #A11BP3 BACK PANEL.
5. 18" DIAMETER REINFORCED CONCRETE BASE WITH 4 ANCHOR BOLTS (1/2" DIAMETER) EACH.
6. STEEL SUPPORT STRUCTURE FABRICATED WITH 4" X 4" X 3/8" STEEL ANGLE. BASE PLATES SHALL BE 12" X 12" X 3/8" WITH 4 ANCHOR BOLTS EACH. ALL CONNECTIONS SHALL BE WELDED AND THE COMPLETED STRUCTURE SHALL BE HOT DIPPED GALVANIZED. PROVIDE ADDITIONAL ELEMENTS WHERE REQUIRED FOR PROPER INSTALLATION AND SUPPORT OF EQUIPMENT. WHERE GALVANIZE COATING IS REMOVED (HOLES FOR EQUIPMENT MOUNTING FOR EXAMPLE), THE BARE STEEL SHALL BE PROTECTED WITH AN APPROPRIATE FINISH.
7. UNDERGROUND ELECTRIC SERVICE CONDUIT TO NEW METER BASE. CONDUIT TO BE COMPLETE WITH FULL LENGTH PULL WIRE AND CAPPED AT ELECTRIC SERVICE CONNECTION.
8. UNDERGROUND CONDUIT TO THE LIFT STATION WET WELL OR SUMP. SEE "LIFT STATION PLAN AND ELEVATION".
9. UNDERGROUND TELEPHONE CONDUIT (1"C WITH PULL CORD) TO UTILITY POLE.
10. ALARM LIGHT (HIGH INTENSITY STROBE TYPE) WITH RED LENS MOUNTED ON TOP OF THE CONTROL PANEL. THE ALARM LIGHT SHALL INDICATE ONLY "HIGH" WET WELL LEVEL.
11. GENERATOR FEEDER.
12. #3 BARE COPPER GROUND CONDUCTOR IN 3/4"C TO 10'x5/8" COPPER CLAD GROUND ROD.
13. METER DISCONNECT REQUIRED BY AMEREN. COMPLY WITH AMEREN INSTALLATION.
14. AUTOMATIC TRANSFER SWITCH, WITH THREE POLE ISOLATION TRANSFER (BREAK BEFORE MAKE). COMPLY WITH AMEREN REQUIREMENTS FOR SWITCH AND SIGNAGE.

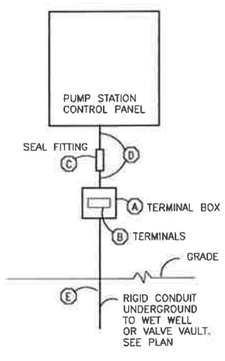

3 TERMINAL BOX DETAIL
E100 NOT TO SCALE

TERMINAL BOX NOTES:

(A) TERMINAL BOX (NEMA-4X) WITH TERMINALS MOUNTED ON BACK PANEL.

(B) TERMINALS (10 REQUIRED) TO BE SQUARE "D" CLASS 9080, TYPE M16/12G WITH MFEM 12 BARRIER MOUNTED ON MH220 TRACK WITH MH10 END CAPS (FOR WIRE SIZE #14 THRU #4). IDENTIFY TERMINALS TO MATCH DESIGNATIONS IN THE PUMP STATION CONTROL PANEL

(C) EXPLOSIONPROOF (CLASS 1, DIVISION 1, GROUP C & D) SEALING FITTING WITH SEALING COMPOUND. (CROUSE-HINDS EYS SERIES OR EQUAL)

(D) 2" PVC COATED RIGID STEEL CONDUIT WITH INDIVIDUAL CONDUCTORS (NUMBER AND SIZE TO MATCH CABLES FURNISHED WITH PUMPS OR FLOATS).

(E) CONDUIT (2" PVC COATED RIGID STEEL) WITH PUMP OR FLOAT CABLES. END OF CONDUIT IN WET WELL TO HAVE END BELL. SECURE CABLES TO SUPPORT RACK WITH STAINLESS STEEL GRIPS.

Engineering By
SOLUTIONS MEP
ENGINEERING REDEFINED
600 S. Holmes Ave., Suite One
St. Louis, MO 63122
(314) 966-6299
www.solutions-aec.com

©2008 Solutions MEP, LLC

SYMBOL	DRAWN	APV'D	DESCRIPTION	DATE

REVISIONS

DR. BY: K.A.W. APV'D BY: J.C.D.
CK'D BY: J.C.D.

PUMP STATION ELECTRICAL DETAILS

PHASED STREET AND STORMWATER PHASE 2 – DETENTION & PUMP O'FALLON, ILLINOIS

RHUTASEL and ASSOCIATES, INC.
CONSULTING ENGINEERS • LAND SURVEYORS
FREEBURG, IL 62243 TEL: (618) 539-3178
CENTRALIA, IL 62801 TEL: (618) 532-1992
IL LICENSE NO. 184-000287

SCALE: N.T.S. SHEET NO. 7
DATE: MARCH, 2013 OF 8

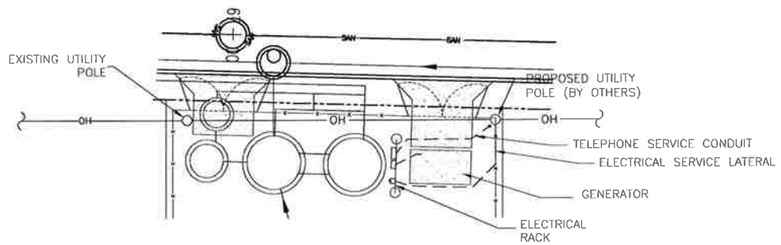

NORTH

1 E110 ELECTRICAL SITE PLAN 1"=10'-0"

LEGEND

—— OH ——	EXISTING OVERHEAD
— — — —	UNDERGROUND CONDUIT

GENERAL NOTES

A. COORDINATE ELECTRICAL SERVICE REQUIREMENTS WITH AMEREN ELECTRIC. AMEREN REPRESENTATIVE IS GUY KETTLER, CELL: 618-604-5708.

B. PROVIDE DISCONNECT AND METER BASE APPROVED AND LISTED BY AMEREN.

C. PROVIDE SERVICE CONDUIT PER AMEREN REQUIREMENTS. COORDINATE INSTALLATION OF SECONDARY SERVICE LATERAL WITH AMEREN FOR PROMPT CONNECTION.

D. PROVIDE GENERATOR TRANSFER SWITCH PER AMEREN REQUIREMENTS.

E. SET EXERCISE SCHEDULE PER OWNER'S REQUEST.

F. DEMONSTRATE GENERATOR OPERATION FOR OWNER'S PERSONNEL.

G. FILL TANK WITH DIESEL FUEL AT PROJECT ACCEPTANCE.

H. COORDINATE TELEPHONE SERVICE WITH LOCAL TELEPHONE UTILITY COMPANY. DEMONSTRATE AUTODIALER OPERATION FOR OWNER'S PERSONNEL.

Engineering By
SOLUTIONS MEP
ENGINEERING REDEFINED
600 S. Holmes Ave., Suite One
St. Louis, MO 63122
(314) 966-6299
www.solutions-aec.com
©2008 Solutions MEP, LLC

SYMBOL	DRAWN	APV'D	DESCRIPTION	DATE

REVISIONS

DR. BY: K.A.W. APV'D BY: J.C.D.
CK'D BY: J.C.D.

PUMP STATION ELECTRICAL SITE PLAN

PHASED STREET AND STORMWATER PHASE 2 – DETENTION & PUMP O'FALLON, ILLINOIS

RHUTASEL and ASSOCIATES, INC.
CONSULTING ENGINEERS • LAND SURVEYORS
FREEBURG, IL. 62243 CENTRALIA, IL. 62801
TEL: (618) 539-3179 TEL: (618) 532-1992
IL LICENSE NO. 184-000787

SCALE: N.T.S. SHEET NO. 8
DATE: MARCH, 2013 OF 8

Illinois Department of Transportation

Route: Detention & Pump
County: St. Clair
Local Agency: City of O'Fallon
Section: N.A.

(Construction) Estimate of Cost

Location and brief description (Sta. and land description of beginning; Sta. only for end for county and road districts; street limits for municipality.)
Construction of open detention ponds at 410 E. Washington and 413 E. Adams Streets, and construction of a storm water pumping station at 410 E. Washington Street.

Total Project Length	N.A.
Net Length	N.A.

Surface Type	N.A.
Width	N.A.

Shoulder Type	N.A.
Width	N.A.

Bridge or Culvert

Length	N.A.
Width	N.A.

Item Number	Items	Unit	Quantity	Unit Price	Total Cost
	CARRIED FORWARD				
20200100	Earth Excavation	Cu Yd	2,140.00	14.00	$29,960.00
25000100	Seeding, Class 1	Acre	0.33	2,800.00	$ 924.00
25000400	Nitrogen Fertilizer Nutrient	Pound	30.00	3.00	$ 90.00
25000500	Phosphorus Fertilizer Nutrient	Pound	30.00	3.00	$ 90.00
25000600	Potassium Fertilizer Nutrient	Pound	30.00	3.00	$ 90.00
25100115	Mulch, Method 2	Acre	0.33	2,800.00	$ 924.00
28000250	Temporary Erosion Control Seeding	Pound	50.00	10.00	$ 500.00
28000500	Inlet and Pipe Protection	Each	2.00	200.00	$ 400.00
42300200	Portland Cement Concrete Driveway Pvmt, 6 Inch	Sq Yd	30.00	55.00	$1,650.00
54213663	Precast Reinf Concrete Flared End Sections 18"	Each	1.00	600.00	$ 600.00
54213666	Precast Reinf Concrete Flared End Sections 21"	Each	1.00	750.00	$ 750.00
54247110	Grating For Concrete Flared End Section 18"	Each	1.00	500.00	$ 500.00
54247120	Grating For Concrete Flared End Section 21"	Each	1.00	600.00	$ 600.00
550A2540	Storm Sewers, Rubber Gasket, Class A, Ty. 2 18	Foot	11.00	105.00	$1,155.00
550A2550	Storm Sewers, Rubber Gasket, Class A, Ty. 2 21	Foot	27.00	125.00	$3,375.00
60615400	Paved Ditch, Type A-15	Foot	149.00	35.00	$5,215.00
64100120	Sight Screen, Wooden Fence, Type P 8'	Foot	749.00	35.00	$26,215.00
67100100	Mobilization	L Sum	1.00	10,000.00	$10,000.00
Z0047700	Pump Station Complete	L Sum	1.00	195,000.00	$195,000.00
	☐ Page Total	☒ Total Estimated Cost			$278,038.00

Made by T.M.L. Date 03/14/2013

Checked by _____ Date _____

Printed on 8/29/2013 11:36 AM

BLR 11510 (Rev. 7/05)

CITY OF O'FALLON

ST. CLAIR COUNTY, ILLINOIS

PHASED STREET AND STORMWATER IMPROVEMENTS
PHASE 3 - WASHINGTON STREET IMPROVEMENTS

INDEX OF SHEETS

1. COVER SHEET
2. SUMMARY OF QUANTITIES & GENERAL NOTES
3. TYPICAL SECTIONS & DETAILS
4. SCHEDULES
5.–6. EAST WASHINGTON STREET PLAN & PROFILE
7.–10. CROSS SECTIONS

APPLICABLE IDOT HIGHWAY STANDARDS

280001–07	701501–06
420001–07	701801–05
420701–02	701901–02
424001–07	B.L.R. 10–6
542301–03	B.L.R. 17–4
606001–05	

LOCATION MAP

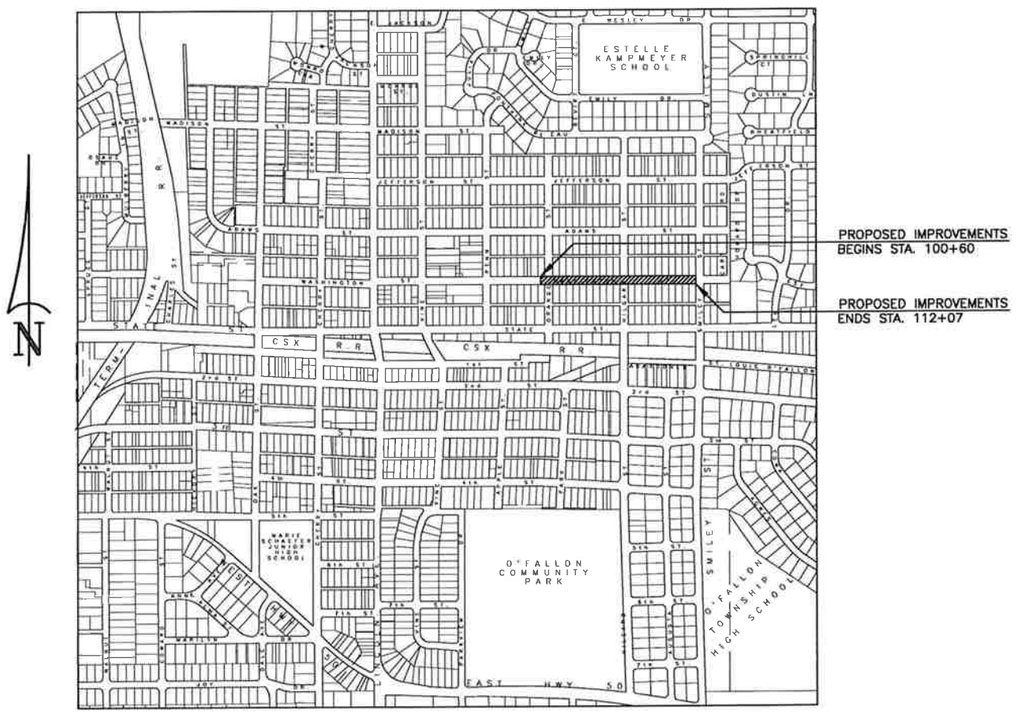

AREAS TO BE IMPROVED

VICINITY MAP

WATER
CITY OF O'FALLON
255 SOUTH LINCOLN STREET
O'FALLON, ILLINOIS 62269
ATTN: DENNIS SULLIVAN, P.E.
618–624–4500 EXT. 3

ELECTRIC & GAS
AMEREN IP
1050 WEST BLVD.
BELLEVILLE, ILLINOIS 62221
ATTN: KELLY BAUZA
618–236–4309

SEWER
CITY OF O'FALLON
255 SOUTH LINCOLN STREET
O'FALLON, ILLINOIS 62269
ATTN: DENNIS SULLIVAN, P.E.
618–624–4500 EXT. 3

TELEPHONE
AT&T ILLINOIS
203 GOETHE STREET
COLLINSVILLE, ILLINOIS 62234
ATTN: DEAN LITZENBURG
618–346–6422

TRACY M. LAWLESS
47331
REGISTERED PROFESSIONAL ENGINEER OF ILLINOIS

Tracy M. Lawless

Date of Signing

Date of License Expiration

HOLD IT ! CALL BEFORE YOU DIG !

Phone J.U.L.I.E.

Underground Cable

The owner would like to remind you that underground utility facilities can be damaged by shovel blades or other digging equipment. You can prevent damage or possible personal danger by phoning 800/892-0123 at least 48 hours before you dig. That's the toll-free number for "J.U.L.I.E.", which stands for Joint Utilities Location Information for Excavators.

If there are any pipes, cables, lines or mains in the excavation area, utility personnel will be out to mark the facilities so you can work around them.

Toll Free 800/892-0123

RHUTASEL and ASSOCIATES, INC.

CONSULTING ENGINEERS • LAND SURVEYORS

CORPORATE OFFICE
4 INDUSTRIAL DRIVE
FREEBURG, ILLINOIS 62243
(618) 539–3178

REGIONAL OFFICE
201 SOUTH LOCUST STREET
CENTRALIA, ILLINOIS 62801
(618) 532–1992

APPROVED _____ _____
MAYOR, CITY OF O'FALLON DATE

OCTOBER 2012

SUMMARY OF QUANTITIES

CODE NO.	ITEM	UNIT	TOTAL QUANTITY
20100110	TREE REMOVAL (6 TO 15 UNITS DIAMETER)	UNIT	12
20100210	TREE REMOVAL (OVER 15 UNITS DIAMETER)	UNIT	192
20200100	EARTH EXCAVATION	CU YD	1,787
20800150	TRENCH BACKFILL	CU YD	127
25000100	SEEDING, CLASS 1	ACRE	0.6
25000400	NITROGEN FERTILIZER NUTRIENT	POUND	52
25000500	PHOSPHORUS FERTILIZER NUTRIENT	POUND	52
25000600	POTASSIUM FERTILIZER NUTRIENT	POUND	52
25100115	MULCH, METHOD 2	ACRE	0.6
28000250	TEMPORARY EROSION CONTROL SEEDING	POUND	57
30200650	PROCESSING MODIFIED SOILS 12"	SQ YD	5,136
30201500	LIME	TON	99
35101400	AGGREGATE BASE COURSE, TYPE B	TON	86
40200800	AGGREGATE SURFACE COURSE, TYPE B	TON	22
40201000	AGGREGATE FOR TEMPORARY ACCESS	TON	50
40800050	INCIDENTAL HOT-MIX ASPHALT SURFACING	TON	39
42000201	PORTLAND CEMENT CONCRETE PAVEMENT 7" (JOINTED)	SQ YD	4,086
42001200	PAVEMENT FABRIC	SQ YD	4,086
42001300	PROTECTIVE COAT	SQ YD	536
42300200	PORTLAND CEMENT CONCRETE DRIVEWAY PAVEMENT, 6 INCH	SQ YD	195
42400100	PORTLAND CEMENT CONCRETE SIDEWALK, 4 INCH	SQ FT	3,472
42400800	DETECTABLE WARNINGS	SQ FT	80
44000200	DRIVEWAY PAVEMENT REMOVAL	SQ YD	46
44000500	COMBINATION CURB AND GUTTER REMOVAL	FOOT	68
44000600	SIDEWALK REMOVAL	SQ FT	2,874
50105220	PIPE CULVERT REMOVAL	FOOT	810
54213447	END SECTIONS 12"	EACH	1
54213459	END SECTIONS 24"	EACH	1
54216555	REINFORCED CONCRETE PIPE TEE, 15" PIPE WITH 15" RISER	EACH	1
550A2320	STORM SEWERS, RUBBER GASKET, CLASS A, TYPE 1 12"	FOOT	566
550A2330	STORM SEWERS, RUBBER GASKET, CLASS A, TYPE 1 15"	FOOT	55
550A2530	STORM SEWERS, RUBBER GASKET, CLASS A, TYPE 2 15"	FOOT	61
550A2540	STORM SEWERS, RUBBER GASKET, CLASS A, TYPE 2 18"	FOOT	269
550A2560	STORM SEWERS, RUBBER GASKET, CLASS A, TYPE 2 24"	FOOT	41
56109210	WATER VALVES TO BE ADJUSTED	EACH	3
60242500	INLETS, SPECIAL, NO. 1	EACH	10
60260100	INLETS TO BE ADJUSTED	EACH	2
60500060	REMOVING INLETS	EACH	3
60604400	COMBINATION CONCRETE CURB AND GUTTER, TYPE B-6.18	FOOT	2,316
67100100	MOBILIZATION	L SUM	1
70102620	TRAFFIC CONTROL AND PROTECTION, STANDARD 701501	L SUM	1
70102640	TRAFFIC CONTROL AND PROTECTION, STANDARD 701801	L SUM	1
78000600	THERMOPLASTIC PAVEMENT MARKING - LINE 12"	FOOT	73
XX003213	ADJUSTING WATER SERVICE LINES	EACH	6
XX004040	DOMESTIC WATER METER TO BE RELOCATED	EACH	3
XX005534	SIDEWALK DRAIN	EACH	1

GENERAL NOTES

1.) ALL CONSTRUCTION SHALL BE IN ACCORDANCE WITH ILLINOIS DEPARTMENT OF TRANSPORTATION STANDARD SPECIFICATIONS FOR ROAD AND BRIDGE CONSTRUCTION, ADOPTED JANUARY 1, 2012.

2.) AN ESTIMATED QUANTITY OF 50 TONS OF AGGREGATE FOR TEMPORARY ACCESS HAS BEEN INCLUDED IN THE PLANS FOR THE PURPOSE OF MAINTAINING ACCESS TO PRIVATE PROPERTY AND SIDE ROADS THROUGHOUT CONSTRUCTION OPERATIONS DURING THIS CONTRACT.

3.) ALL AREAS DISTURBED FOR ANY REASON WITHIN THE CONSTRUCTION LIMITS SHALL BE SEEDED WITH CLASS 1 SEEDING. NUTRIENTS SHALL CONFORM TO ARTICLE 250.04.

4.) PROTECTIVE COAT SHALL BE APPLIED TO ALL GUTTER FLAGS AND FACE OF CURB.

5.) THE CONTRACTOR SHALL VERIFY ALL DIMENSIONS AND CONDITIONS IN THE FIELD PRIOR TO CONSTRUCTION AND ORDERING OF MATERIALS.

6.) "ROAD CONSTRUCTION AHEAD" SIGNS SHALL BE PLACED AT THE BEGINNING AND END OF THE PROJECT PLUS THE INTERSECTING SIDE ROADS AND WILL BE INCLUDED IN THE TRAFFIC CONTROL PAY ITEMS. ALL CONSTRUCTION SIGNS SHALL BE FLUORESCENT ORANGE IN COLOR.

7.) THE CONTRACTOR SHALL REMOVE, MAINTAIN IN A TEMPORARY LOCATION AND PERMANENTLY RESET ALL MAILBOXES AND TRAFFIC SIGNS WHICH INTERFERE WITH CONSTRUCTION OPERATIONS IN ACCORDANCE WITH ARTICLES 107.20 AND 107.25 OF THE "STANDARD SPECIFICATIONS FOR ROAD AND BRIDGE CONSTRUCTION".

8.) ALL ENTRANCES SHALL BE CONSTRUCTED AT RIGHT ANGLES TO THE PROPOSED CENTERLINE UNLESS OTHERWISE NOTED.

9.) FACTORS USED FOR APPLICATION RATES AND QUANTITY CALCULATIONS ARE AS FOLLOWS:

SEEDING

NITROGEN FERTILIZER NUTRIENT	90 LBS/ACRE
PHOSPHORUS FERTILIZER NUTRIENT	90 LBS/ACRE
POTASSIUM FERTILIZER NUTRIENT	90 LBS/ACRE
MULCH	2 TONS/ACRE
TEMPORARY SEEDING	100 LBS/ACRE

LIME MODIFIED SOILS

SOIL	1.4445 TONS/CU. YD.
LIME (4% OF SOIL)	0.01926 TONS/SQ. YD./12 IN.

SYMBOL	DRAWN	APV'D	DESCRIPTION	DATE
REVISIONS				

DR. BY: M.A.L. APV'D BY: T.M.L.
CK'D BY: A.A.S.

SUMMARY OF QUANTITIES & GENERAL NOTES

PHASED STREET AND STORMWATER PHASE 3 - WASHINGTON STREET O'FALLON, ILLINOIS

RHUTASEL and ASSOCIATES, INC.
CONSULTING ENGINEERS • LAND SURVEYORS
FREEBURG, IL. 62243 TEL: (618) 539-3178
CENTRALIA, IL. 62801 TEL: (618) 532-1992
E. MAIL: RAI@RAI-INC.NET

SCALE: N.T.S. SHEET NO. 2
DATE: OCTOBER, 2012 OF 10

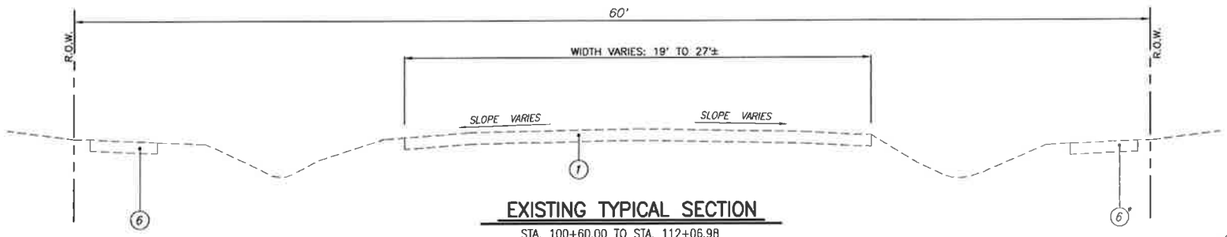

EXISTING TYPICAL SECTION

STA. 100+60.00 TO STA. 112+06.98
* STA. 100+60.00 TO 108+41.27 & 108+91.60 TO 109+41.56

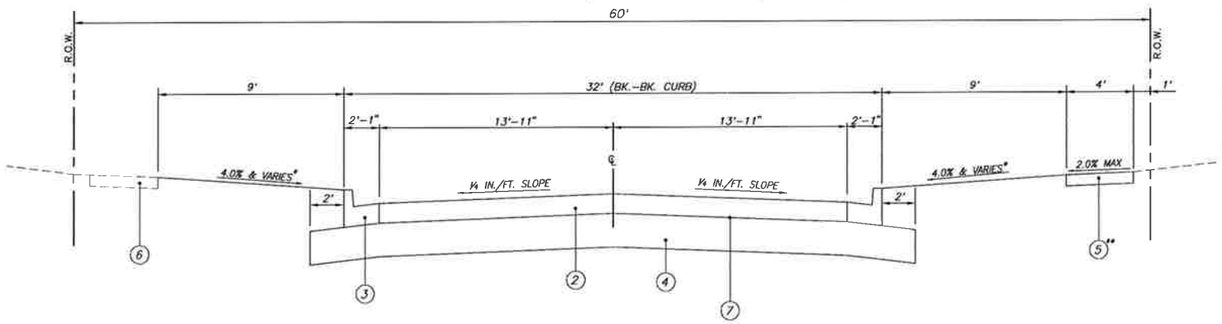

PROPOSED TYPICAL SECTION

STA. 100+60.00 TO STA. 112+06.98
* SEE CROSS SECTIONS FOR SLOPES
** SEE PLAN VIEW FOR PROPOSED P.C.C. SIDEWALK LOCATIONS

LEGEND

1. EXISTING OIL AND CHIP PAVEMENT
2. P.C.C. PAVEMENT (JOINTED), 7"
3. COMBINATION CONCRETE CURB AND GUTTER, TYPE B-6.18
4. LIME MODIFIED SOIL, 12"
5. P.C.C. SIDEWALK, 4"
6. EXISTING P.C.C. SIDEWALK
7. PAVEMENT FABRIC

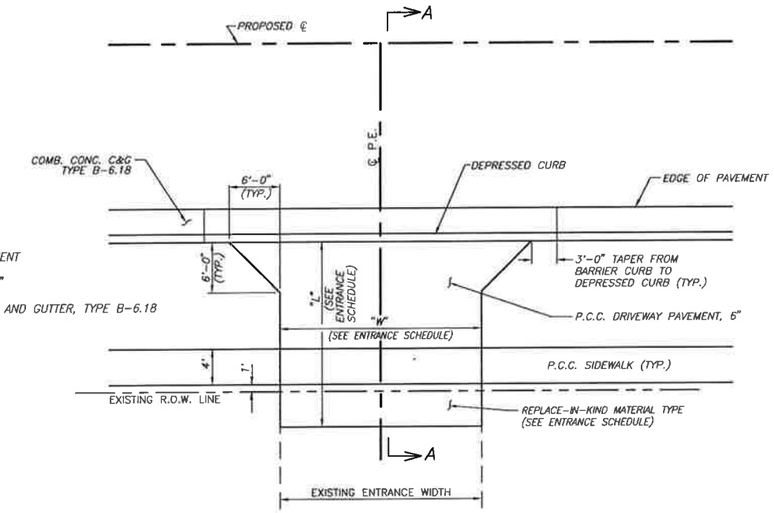

P.E./C.E. DETAIL "A"

PRIVATE ENTRANCE/COMMERCIAL ENTRANCE
N.T.S.

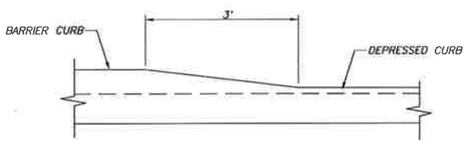

DETAIL OF CURB HEIGHT TRANSITION

N.T.S.

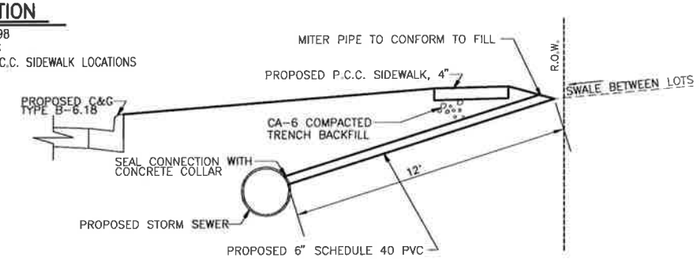

SIDEWALK DRAIN DETAIL

N.T.S.

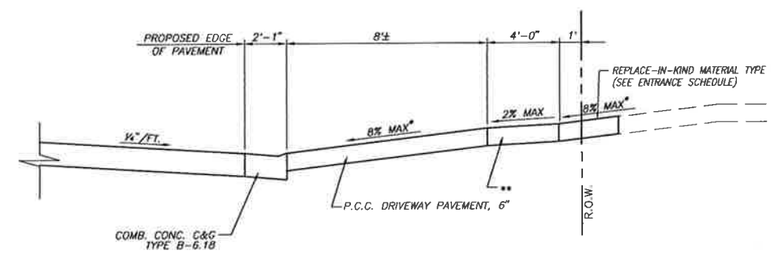

SECTION "A-A"

* SEE CROSS SECTIONS FOR SLOPES
** SEE PLAN SHEET FOR LIMITS OF SIDEWALK CONSTRUCTION

NOTE: THE PORTION OF DRIVEWAY PAVEMENT CONSTRUCTED ADJACENT TO THE PROPOSED SIDEWALK SHALL BE POURED SEPERATELY FROM THE REMAINDER OF THE DRIVEWAY PAVEMENT, AND HAVE CONTRACTION JOINTS THAT ALIGN WITH THOSE IN THE ADJACENT SIDEWALK. THIS WORK SHALL BE PAID FOR AS PCC DRIVEWAY PAVEMENT, 6".

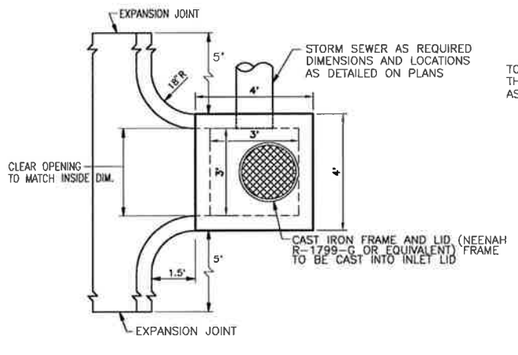

PLAN

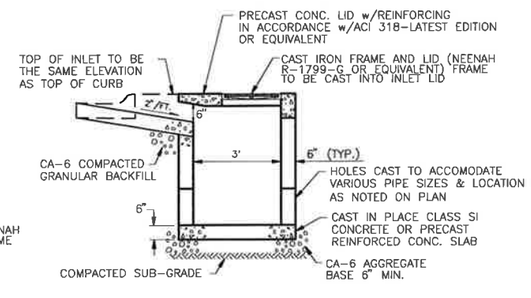

ELEVATION

INLET SPECIAL NO. 1 – 3'X3'

N.T.S.

SYMBOL	DRAWN	APV'D	DESCRIPTION	DATE

REVISIONS

DR BY: M.A.L. | APV'D BY: T.M.L.
CK'D BY: A.A.S.

TYPICAL SECTIONS & DETAILS

PHASED STREET AND STORMWATER PHASE 3 – WASHINGTON STREET O'FALLON, ILLINOIS

RHUTASEL and ASSOCIATES, INC.
CONSULTING ENGINEERS • LAND SURVEYORS
FREEBURG, IL. 62243 TEL: (618) 539-3178
CENTRALIA, IL. 62801 TEL: (618) 532-1992
I. LICENSE NO. 184-000407

SCALE: N.T.S. SHEET NO. 3
DATE: OCTOBER, 2012 OF 10

SCHEDULES

EARTHWORK SCHEDULE

STAGE	LOCATION	EARTH EXCAVATION	EARTH EXCAVATION ADJUSTED FOR SHRINKAGE (25%)	EMBANKMENT	EARTHWORK BALANCE WASTE (+) OR SHORTAGE (−)
		CU YD	CU YD	CU YD	CU YD
1	STA. 100+10.00 TO 106+60.80	1,056.2	792.2	62.6	+729.6
2	STA. 106+60.80 TO 112+06.98	730.4	547.8	29.7	+518.1
	TOTAL	1,786.6	1,340.0	92.3	+1,247.7

NOTE: REMOVAL OF EXISTING OIL AND CHIP SURFACE AND AGGREGATE HAS BEEN INCLUDED IN THE EARTHWORK QUANTITIES AND WILL BE PAID FOR AT THE CONTRACT UNIT PRICE PER CU. YD. FOR EARTH EXCAVATION.

PAVING SCHEDULE

STATION	PROCESSING MODIFIED SOIL, 12"	LIME	COMB. CONC. C&G B-6.18	PROTECTIVE COAT	PCC PVM'T (JOINTED) 7"	PAVEMENT FABRIC
	SQ YD	TON	FT	SQ YD	SQ YD	SQ YD
STA. 100+60.00 TO 106+60.80	2,763.3	53	1,204	278.7	2,217.3	2,217.3
STA. 106+60.80 TO 112+06.98	2,372.5	46	1,112	257.4	1,868.3	1,868.3
TOTAL	5,135.8	99	2,316	536.1	4,085.6	4,085.6

SEEDING / EROSION CONTROL

LOCATION	SEEDING CLASS 1	MULCH METHOD 2	FERTILIZER NUTRIENTS			TEMPORARY EROSION CONTROL SEEDING
			NITROGEN	PHOSPHORUS	POTASSIUM	
	ACRE	ACRE	POUND	POUND	POUND	POUND
STA. 100+10.00 TO 106+60.80	0.32	0.32	29	29	29	32
STA. 106+60.80 TO 112+06.98	0.25	0.25	23	23	23	25
TOTAL	0.57	0.57	52	52	52	57

ENTRANCE / SIDEROAD SCHEDULE

STATION	EXISTING SURFACE	TYPE	"L"	"W"	DRIVEWAY PVM'T REMOVAL	PCC DRIVEWAY PAVEMENT 6"	INCIDENTAL HMA SUFACING	AGGREGATE BASE COURSE, TYPE B	AGGREGATE SURFACE COURSE, TYPE B	COMMENTS
			FOOT	FOOT	SQ. YD.	SQ. YD.	TON	TON	TON	
101+85.80 LT.	ASPHALT	P.E.	17.6'	12'	16.4	20.1	0.9	2.0	—	
102+73.50 LT.	AGGREGATE	P.E.	25.2'	12'	—	20.3	—	—	5.0	
102+96.00 RT.	AGGREGATE	P.E.	8.5'	21'	—	24.1	—	—	—	
103+19.50 LT.	AGGREGATE	P.E.	13.9'	12'	1.9	22.3	—	—	—	
103+69.50 LT.	AGGREGATE	P.E.	8'	12'	—	—	—	—	—	TO BE REMOVED
104+20.00 LT.	CONCRETE	P.E.	19.0'	12'	8.6	29.7	—	—	—	
104+73.00 LT.	AGGREGATE	P.E.	16.6'	12'	6.4	20.8	—	—	1.6	
105+83.50 RT.	AGGREGATE	C.E.	8.9'	12'	—	15.9	—	—	—	
108+31.00 RT.	AGGREGATE	P.E.	12.7'	12'	—	20.9	—	—	—	
110+86.00 RT.	CONCRETE	P.E.	12.7'	12'	12.2	20.8	—	—	—	
TOTAL					45.5	195	0.9	2.0	6.6	

STORM SEWER SCHEDULE

No.	STRUCTURE PT. – PT.	RUBBER GASKET, CLASS A					TRENCH BACKFILL
		TYPE 1		TYPE 2			
		12"	15"	15"	18"	24"	
		FOOT	FOOT	FOOT	FOOT	FOOT	CU YD
1	1 – 2	36					6
2	2 – 5	147					7
3	5 – 4				36		29
4	4 – 3					41	12
5	7 – 5				233		14
6	6 – 7	36					7
7	8 – 7			61			24
8	9 – 8	28					2
9	11 – 8		55				7
10	10 – 11	36					8
11	13 – 11	247					5
12	12 – 13	36					6
TOTALS		566	55	61	269	41	127

STORM SEWER STRUCTURE SCHEDULE

No.	LOCATION	DESCRIPTION	TOP LID	INVERT
1	STA. 102+30.01, 19.50' LT.	INLET SPECIAL NO. 1 – 3'X3'	547.29	544.40
2	STA. 102+30.01, 19.50' RT.	INLET SPECIAL NO. 1 – 3'X3'	547.29	544.22
3	STA. 103+53.91, 60.14' LT.	END SECTIONS 24"	—	539.50
4	STA. 103+80.00, 19.50' LT.	INLET SPECIAL NO. 1 – 3'X3'	547.24	541.00
5	STA. 103+80.00, 19.50' RT.	INLET SPECIAL NO. 1 – 3'X3'	547.24	541.18(E) 543.48(W)
6	STA. 106+16.00, 19.50' LT.	INLET SPECIAL NO. 1 – 3'X3'	547.28	544.16
7	STA. 106+16.00, 19.50' RT.	INLET SPECIAL NO. 1 – 3'X3'	547.28	542.35
8	STA. 106+81.00, 19.50' RT.	REIN. CONC. PIPE TEE, 15" PIPE W/ 15" RISER	—	542.68
9	STA. 106+81.12, 47.63' RT.	END SECTIONS 12"	—	546.25
10	STA. 107+39.92, 19.50' LT.	INLET SPECIAL NO. 1 – 3'X3'	546.54	543.16
11	STA. 107+39.92, 19.50' RT.	INLET SPECIAL NO. 1 – 3'X3'	546.54	542.98
12	STA. 109+89.93, 19.50' LT.	INLET SPECIAL NO. 1 – 3'X3'	547.24	544.40
13	STA. 109+89.93, 19.50' RT.	INLET SPECIAL NO. 1 – 3'X3'	547.24	544.22

NOTE: OFFSETS TO ALL INLETS AND MANHOLES ARE TO THE CENTER OF THE DRAINAGE STRUCTURE.

SYMBOL	DRAWN	APV'D	DESCRIPTION	DATE

REVISIONS

DR BY: M.A.L. APV'D BY: T.M.L.

CK'D BY: A.A.S.

SCHEDULES OF QUANTITIES

PHASED STREET AND STORMWATER PHASE 3 – WASHINGTON STREET O'FALLON, ILLINOIS

RHUTASEL and ASSOCIATES, INC.
CONSULTING ENGINEERS • LAND SURVEYORS
FREEBURG, IL. 62243 TEL: (618) 539-3178
CENTRALIA, IL. 62801 TEL: (618) 532-1992
LICENSE NO. 184-000887

SCALE: N.T.S. SHEET NO. 4

DATE: OCTOBER, 2012 OF 10

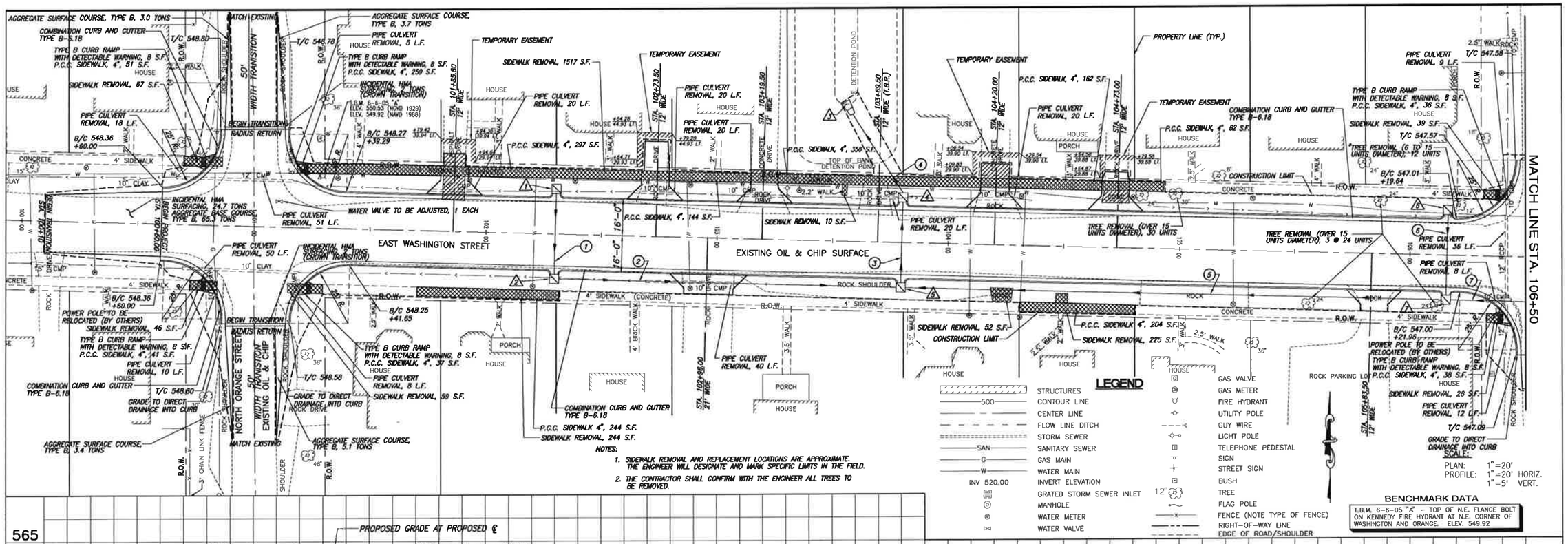

SYMBOL	DRWN	APV'D	DESCRIPTION	DATE
			REVISIONS	

DR BY: M.A.L. APV'D BY: T.M.L.
CK'D BY: A.A.S.

EAST WASHINGTON STREET PLAN AND PROFILE

PHASED STREET AND STORMWATER PHASE 3 – WASHINGTON STREET O'FALLON, ILLINOIS

RHUTASEL and ASSOCIATES, INC.
CONSULTING ENGINEERS • LAND SURVEYORS
FREEBURG, IL 62243 TEL: (618) 539-3178
CENTRALIA, IL 62801 TEL: (618) 532-1992
E (IDPR) NO. 184-000887

SCALE: AS NOTED SHEET NO. 5
DATE: OCTOBER, 2012 OF 10

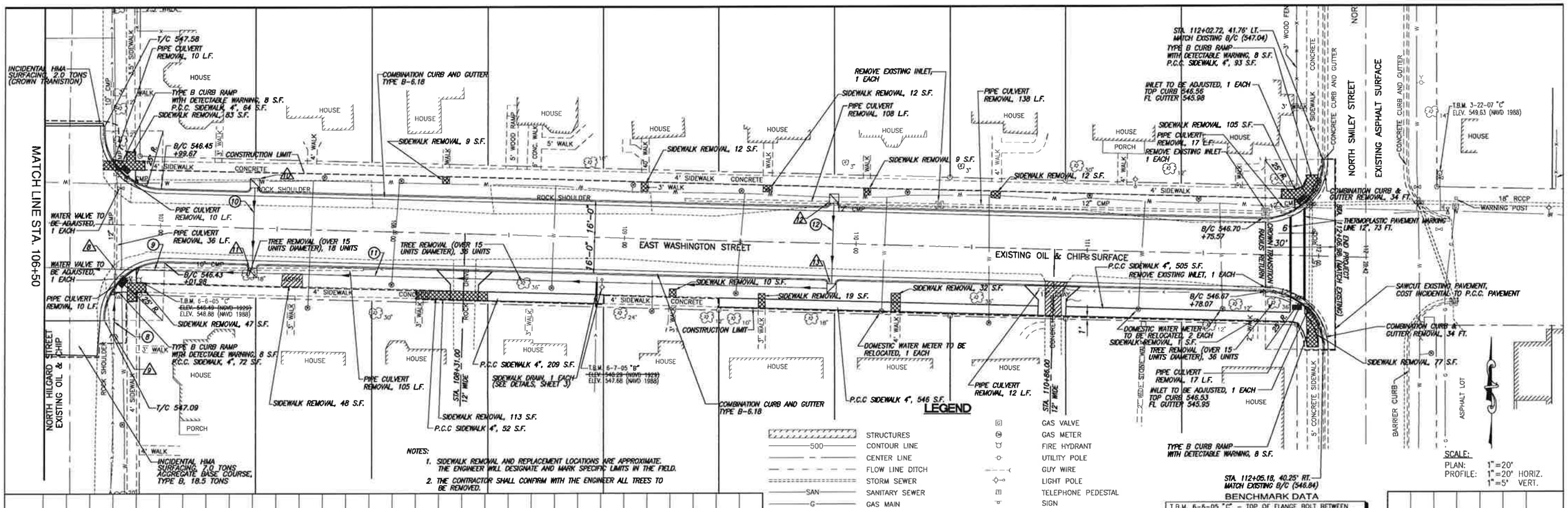

SYMBOL	DRAWN	APV'D	DESCRIPTION	DATE

REVISIONS

DR. BY: M.A.L. APV'D BY: T.M.L.
CK'D BY: A.A.S.

EAST WASHINGTON STREET PLAN AND PROFILE

PHASED STREET AND STORMWATER PHASE 3 – WASHINGTON STREET O'FALLON, ILLINOIS

RHUTASEL and ASSOCIATES, INC.
CONSULTING ENGINEERS • LAND SURVEYORS
FREEBURG, IL. 62243 TEL: (618) 539-3178
CENTRALIA, IL. 62801 TEL: (618) 532-1992
PROFESSIONAL LICENSE NO. 184-000987

SCALE: AS NOTED SHEET NO. 6
DATE: OCTOBER, 2012 OF 10

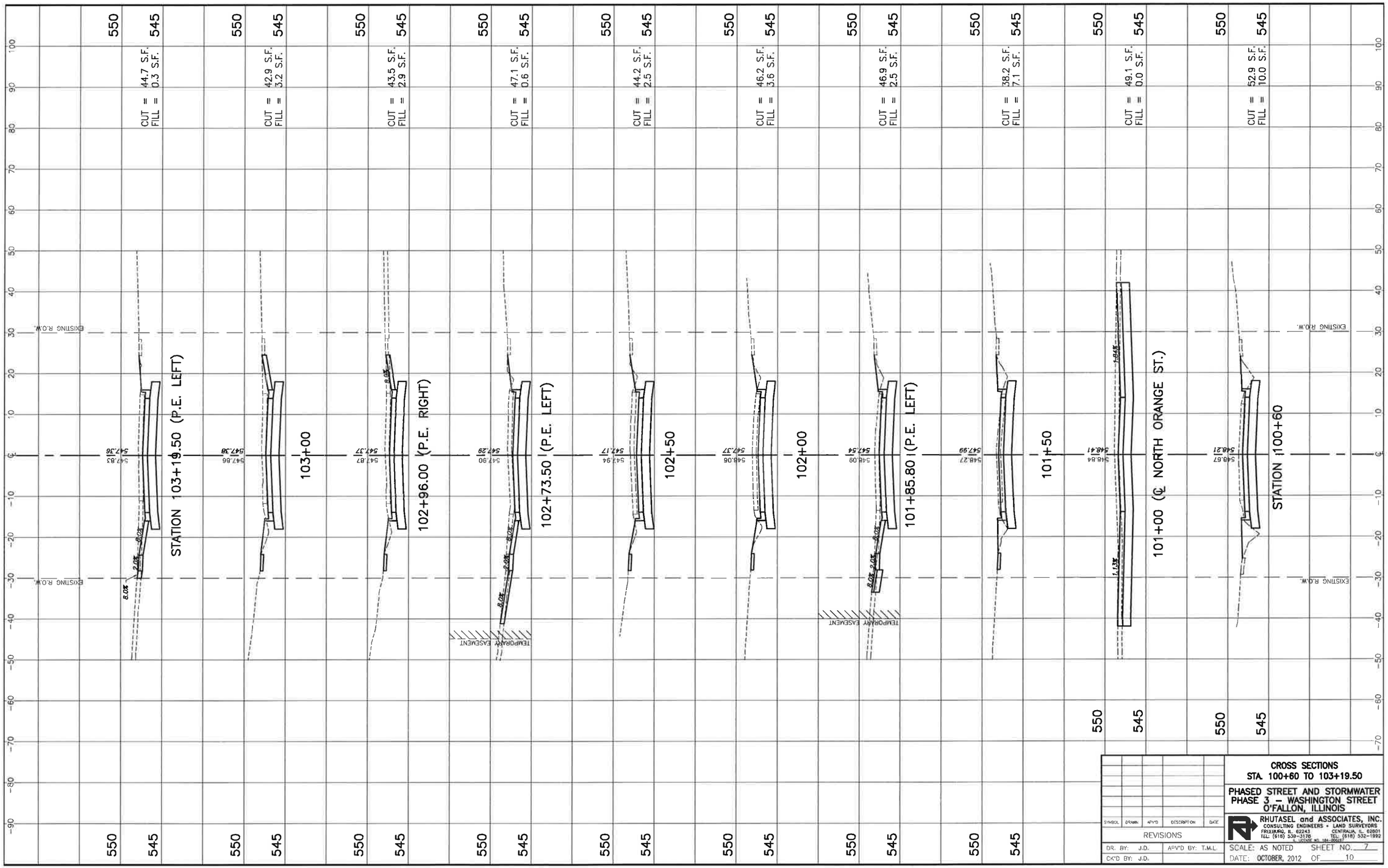

SYMBOL	DRAWN	APV'D	DESCRIPTION	DATE

REVISIONS

DR. BY: J.D. APV'D BY: T.M.L.
CK'D BY: J.D.

CROSS SECTIONS
STA. 100+60 TO 103+19.50

PHASED STREET AND STORMWATER
PHASE 3 – WASHINGTON STREET
O'FALLON, ILLINOIS

RHUTASEL and ASSOCIATES, INC.
CONSULTING ENGINEERS • LAND SURVEYORS
FREEBURG, IL. 62243 TEL: (618) 539-3176
CENTRALIA, IL. 62801 TEL: (618) 532-1992
IL LICENSE NO. 184-000627

SCALE: AS NOTED SHEET NO. 7
DATE: OCTOBER, 2012 OF 10

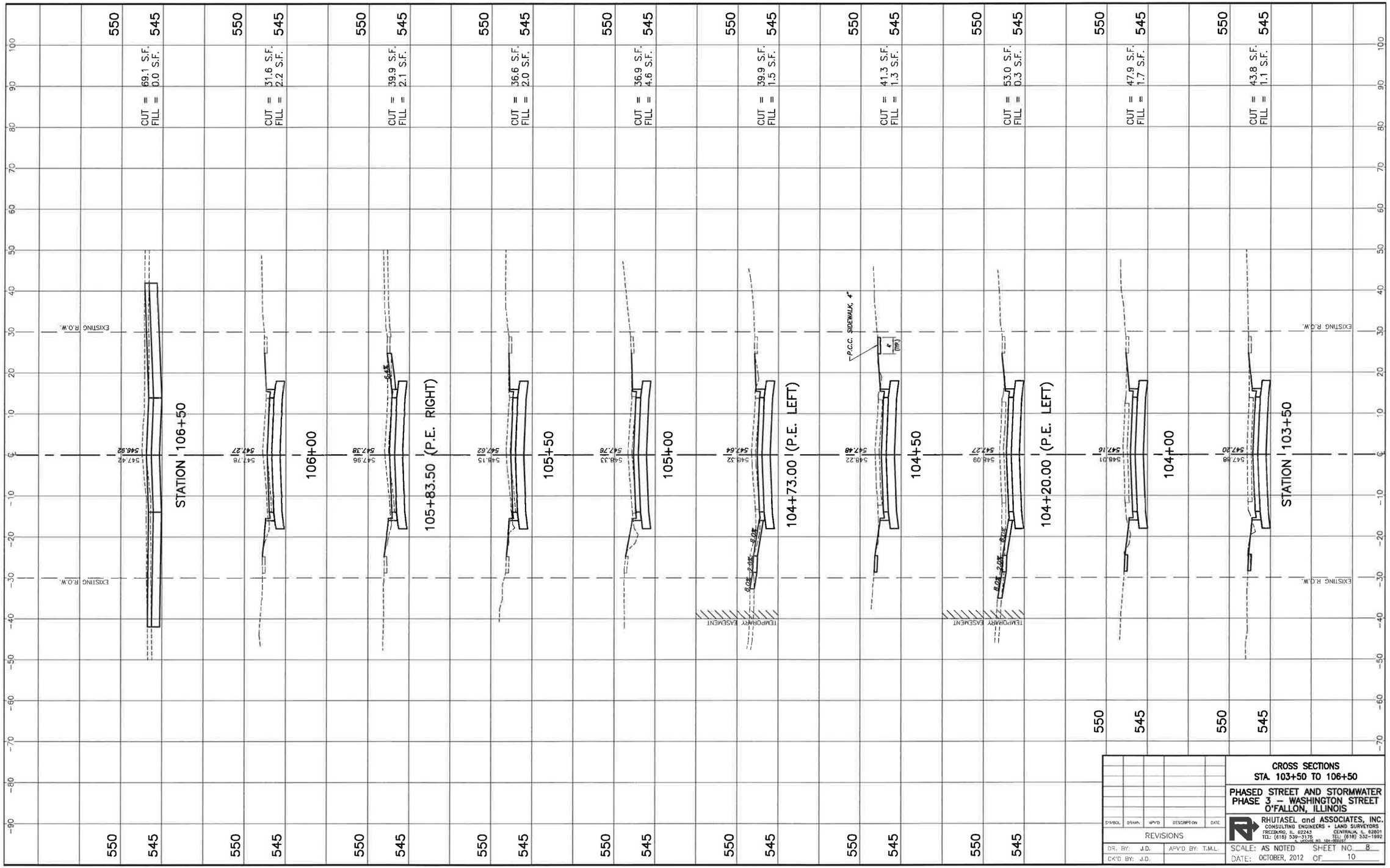

SYMBOL	DRAWN	APV'D	DESCRIPTION	DATE
REVISIONS				

DR. BY: J.D. APV'D BY: T.M.L.
CK'D BY: J.D.

CROSS SECTIONS
STA. 103+50 TO 106+50

PHASED STREET AND STORMWATER
PHASE 3 – WASHINGTON STREET
O'FALLON, ILLINOIS

RHUTASEL and ASSOCIATES, INC.
CONSULTING ENGINEERS • LAND SURVEYORS
FREEBURG, IL. 62243 TEL: (618) 539-3178
CENTRALIA, IL. 62801 TEL: (618) 532-1992
IL LICENSE NO. 184-000897

SCALE: AS NOTED SHEET NO. 8
DATE: OCTOBER, 2012 OF 10